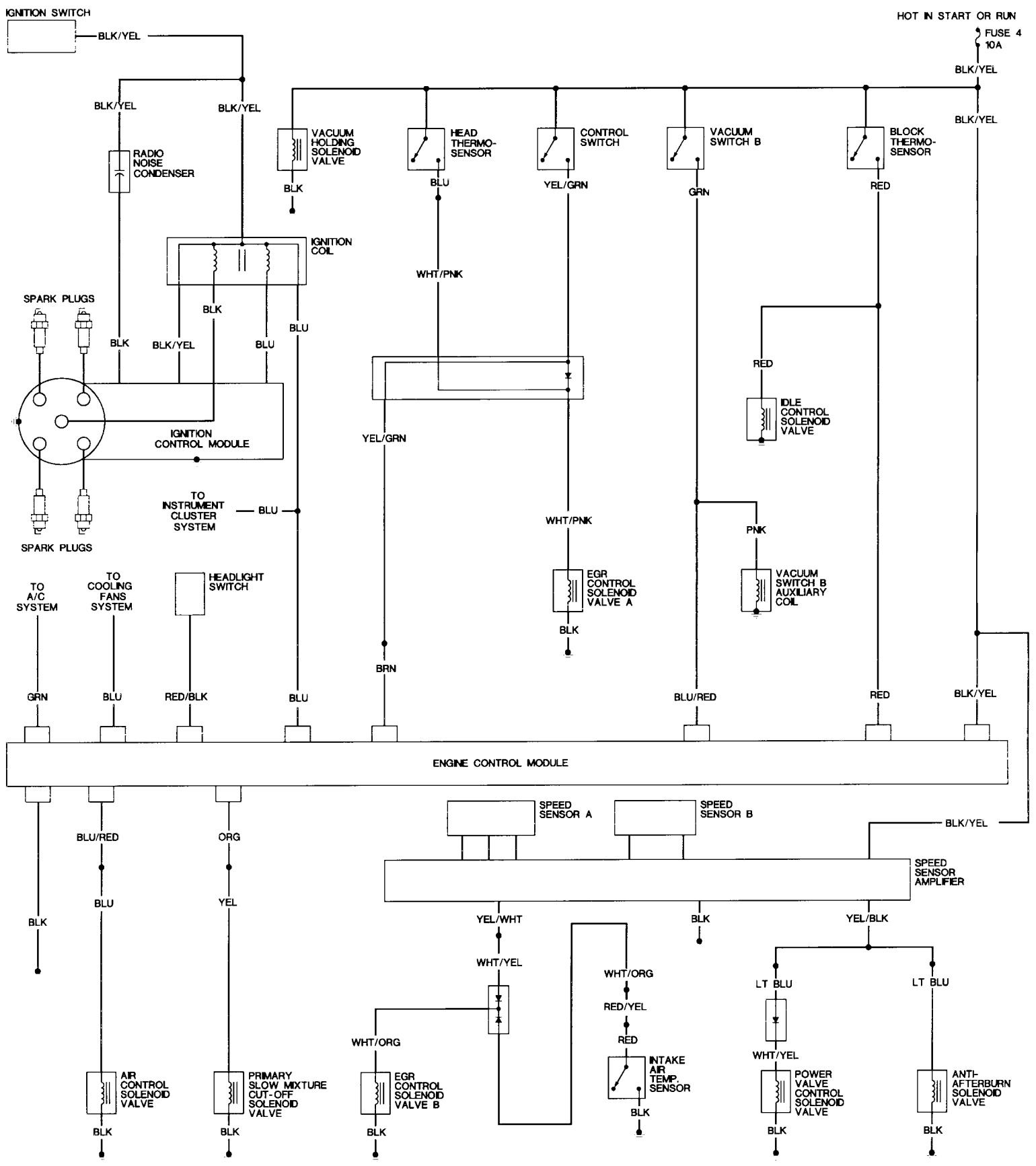
IGNITION SWITCH
BLK/YEL
HOT IN START OR RUN
FUSE 4
10A
BLK/YEL
BLK/YEL
BLK/YEL
BLK/YEL
RADIO NOISE CONDENSER
VACUUM HOLDING SOLENOID VALVE
HEAD THERMO-SENSOR
CONTROL SWITCH
VACUUM SWITCH B
BLOCK THERMO-SENSOR
BLK
BLU
YEL/GRN
GRN
RED
IGNITION COIL
WHT/PNK
SPARK PLUGS
BLK
BLK
BLK/YEL
BLU
BLU
RED
IDLE CONTROL SOLENOID VALVE
IGNITION CONTROL MODULE
YEL/GRN
TO INSTRUMENT CLUSTER SYSTEM
BLU
WHT/PNK
PNK
SPARK PLUGS
TO A/C SYSTEM
TO COOLING FANS SYSTEM
HEADLIGHT SWITCH
EGR CONTROL SOLENOID VALVE A
VACUUM SWITCH B AUXILIARY COIL
BLK
BRN
GRN
BLU
RED/BLK
BLU
BLU/RED
RED
BLK/YEL
ENGINE CONTROL MODULE
SPEED SENSOR A
SPEED SENSOR B
BLK/YEL
BLU/RED
ORG
SPEED SENSOR AMPLIFIER
BLK
BLU
YEL
YEL/WHT
BLK
YEL/BLK
WHT/YEL
WHT/ORG
LT BLU
LT BLU
RED/YEL
WHT/ORG
RED
WHT/YEL
INTAKE AIR TEMP. SENSOR
AIR CONTROL SOLENOID VALVE
PRIMARY SLOW MIXTURE CUT-OFF SOLENOID VALVE
EGR CONTROL SOLENOID VALVE B
BLK
POWER VALVE CONTROL SOLENOID VALVE
ANTI-AFTERBURN SOLENOID VALVE
BLK
BLK
BLK
BLK
BLK
BLK